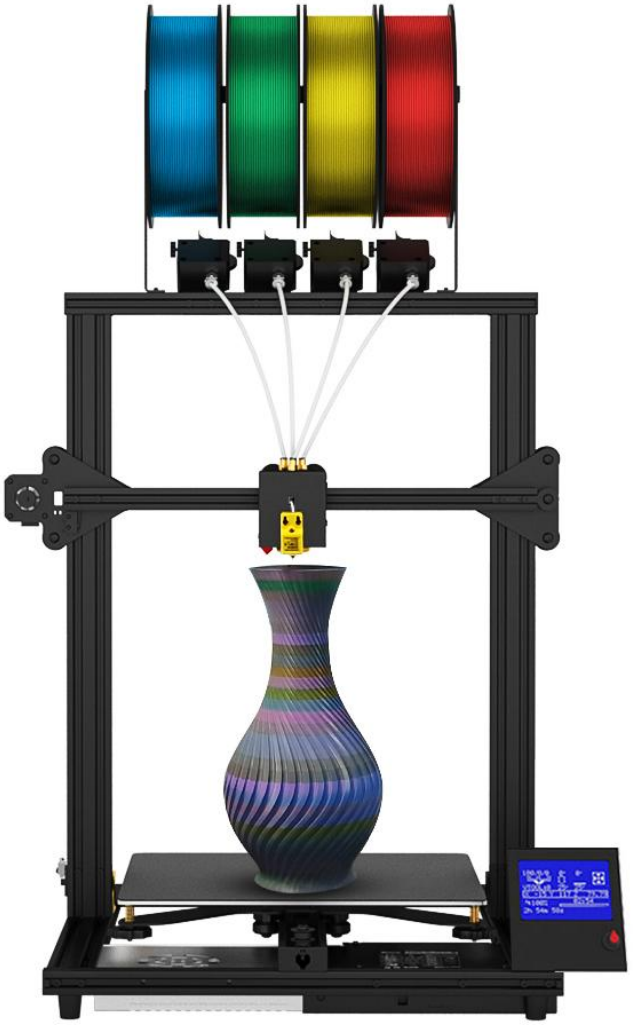

Model: Z8PM3(4)

User Guide

!! ATTENTION !!

Please strictly follow the standard operation when installation.

Please put the printer away from the reach of kids.

Must be guided by adults when children are installed or used.

Take care when installation, to avoid electrical shock hazards.

Caution: Hot!
Hotend has high temperature even the printer stop working.

Caution: Hot!
Hotbed has high temperature even the printer stop working.

Please keep well-ventilated condition! May produce toxic gases when printer working.

Please make sure you have set the AC power select switch to the correct position before power on.

The newest documents download link:

https://github.com/ZONESTAR3D/Z8P

Parts List

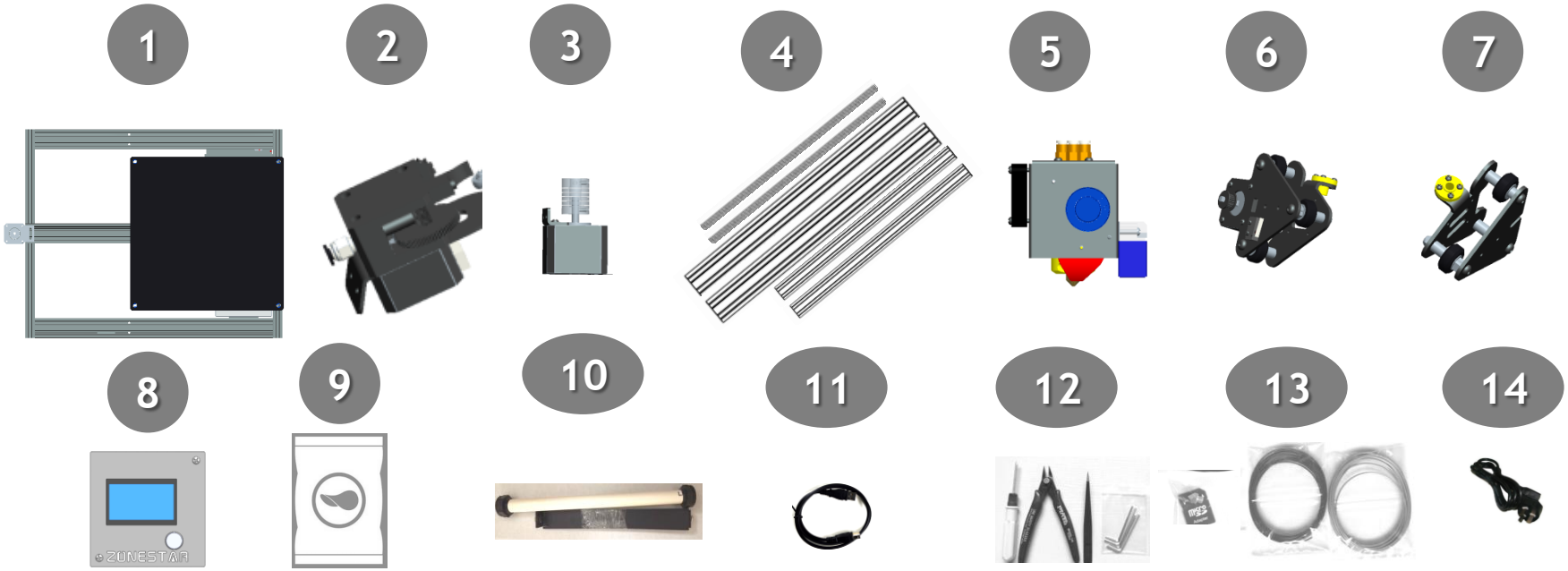

No.	Name	Check	No.	Name	Check
1	Base Module	☐	8	Contol Panel	☐
2	Extruders (3 sets for M3 and 4 sets for M4)	☐	9	Scews, lead screws fix blocks, ENDSTOPs, Fittings, PTFE Tubes, belt, cable tie, etc.	☐
3	Z-axis Motor Modules (2 sets)	☐	10	Filament Roll Bracket	☐
4	Lead screw & Profiles	☐	11	USB cable	☐
5	Print head with bracket M3 or M4 hotend	☐	12	Tools	☐
6	Z carrier left	☐	13	SD card, Card Reader, Gift filament	☐
7	Z carrier right	☐	14	Power cord	☐

Zonestar

Parts

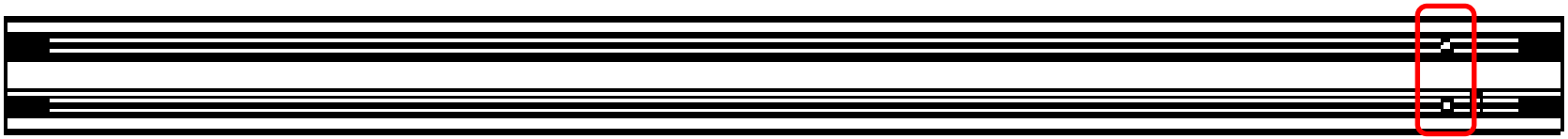

2x Z aluminum profiles, there are 4 taping hole on the end
There are 2 hole on the bottom side

These two holes on the bottom when install

1x top aluminum profile, there are many hole on the front

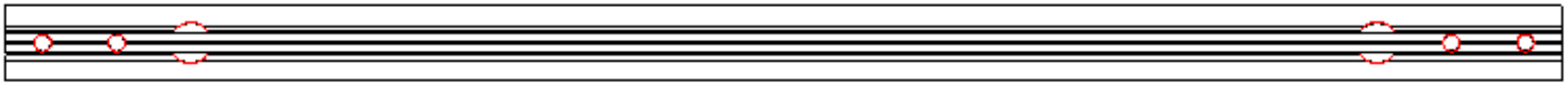

1x X Profile, 2020-420mm, There are two big hole on the back

2x lead screws insert into the Z profie (They are put inside the Z aluminum profiles)

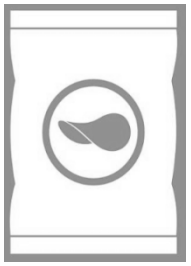

18* M4x18

8* M4x25

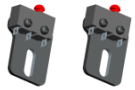

Z ENDSTOP

X Belt idler

PTFE Tube

Z lead screw fix blocks

X Timing Belt

Zonestar

Install Z axis Parts

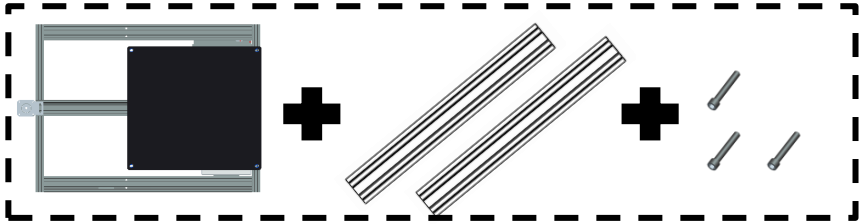

2040V profiles

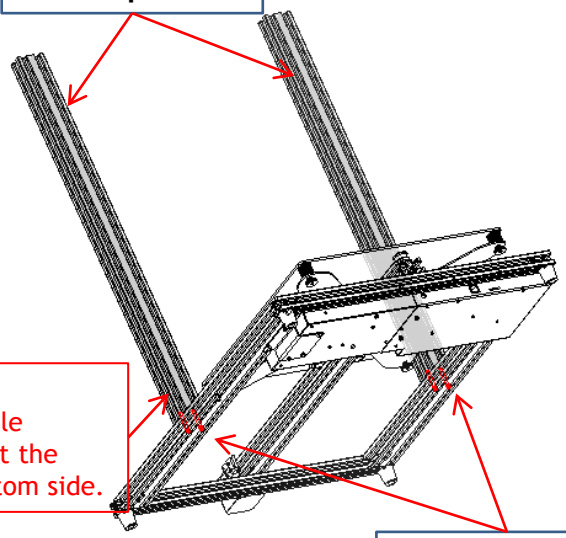

NOTE:
There are two hole on the profile, let the Holes on the bottom side.

M4x25 *4

Install Z profiles to base

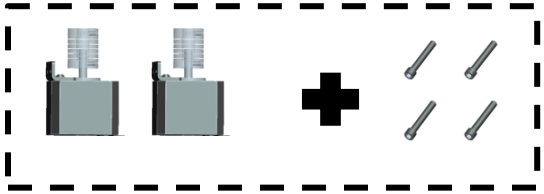

M4x18 *4

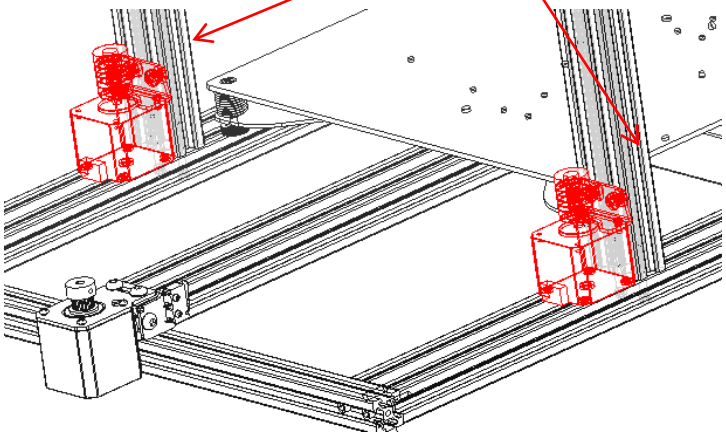

Install Zmotor module to the Z profiles

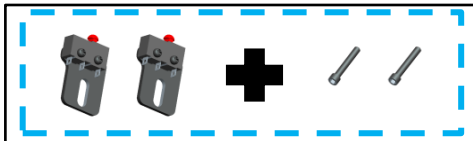

Z ENDSTOPs

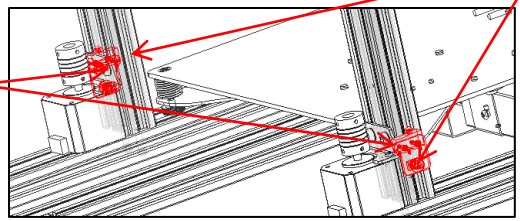

M4x18 *2

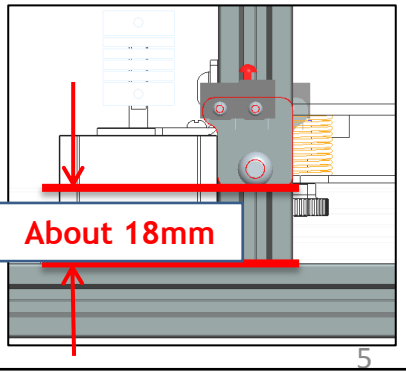

About 18mm

Install Z ENDSTOPs module to the out side of the Z profiles

Install Z axis Parts

Install Z Carrier

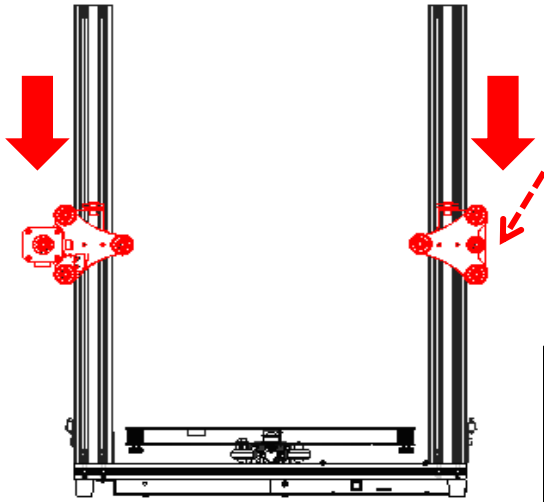

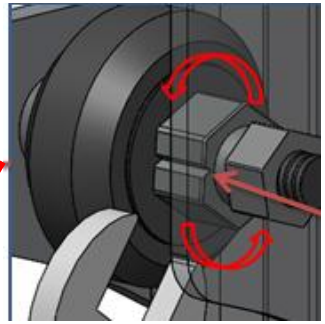

Note:
Adjust the eccentric cloumns let the carrier hold the rail well and move smoothly.

Install lead screws

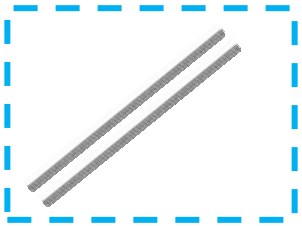

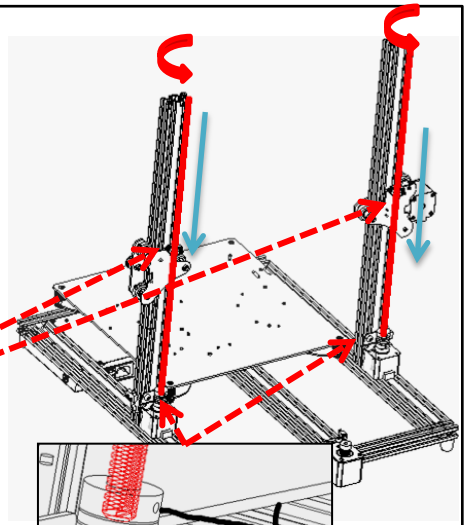

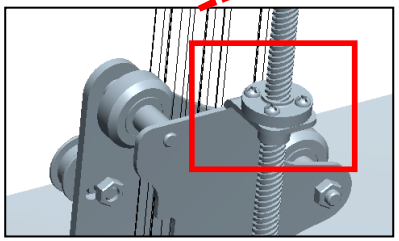

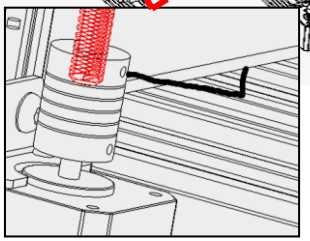

Through the copper nut → Fixed on the Coupling of Z axis motor

Install Top profile

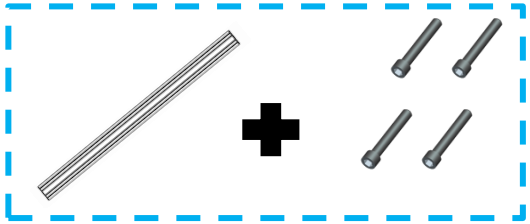

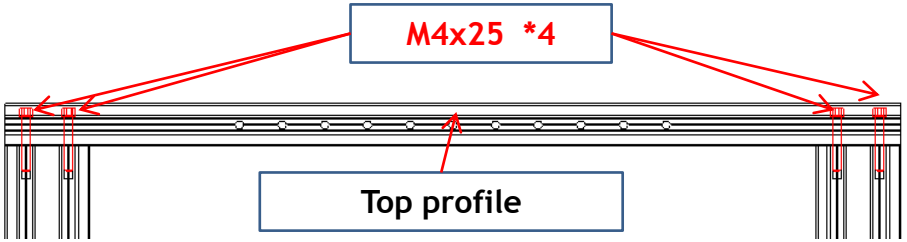

Install X axis Parts

Install X belt idler and X profile

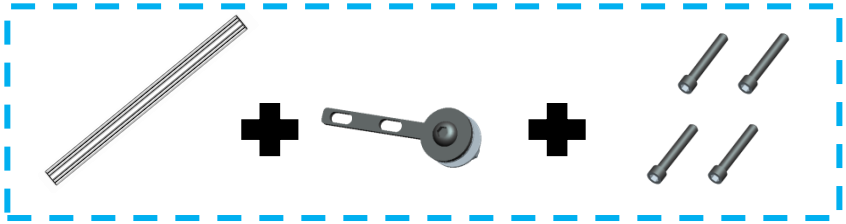

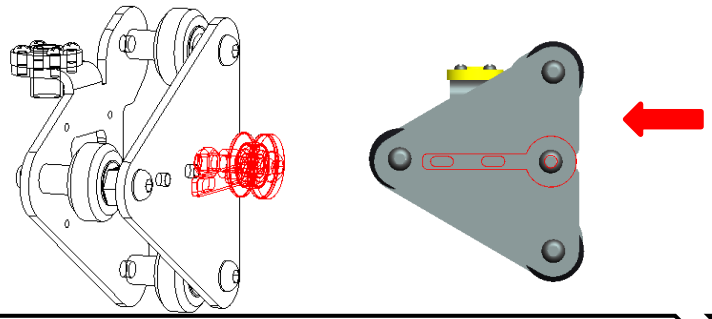

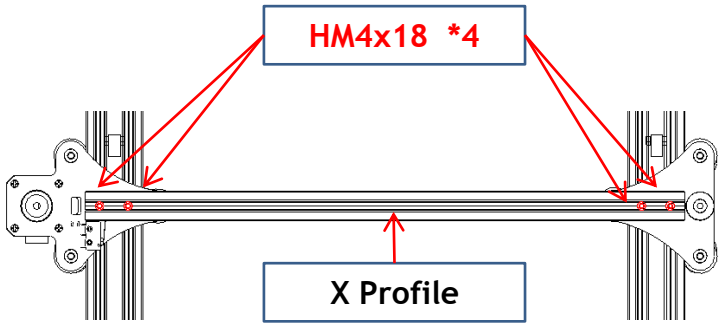

Install the X belt idler to the Z right carrier, move it to the left

Install the X profile to the Z carrier

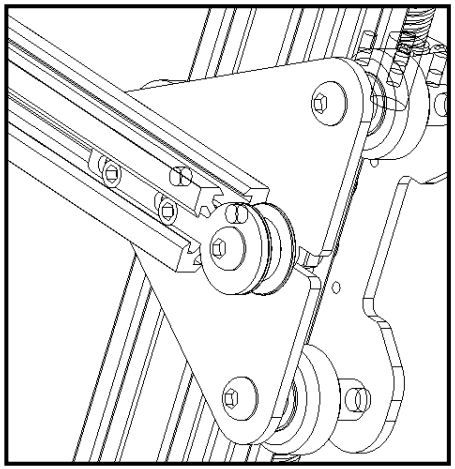

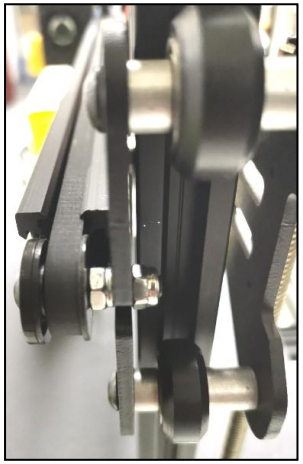

Install X axis Parts

Install X profile

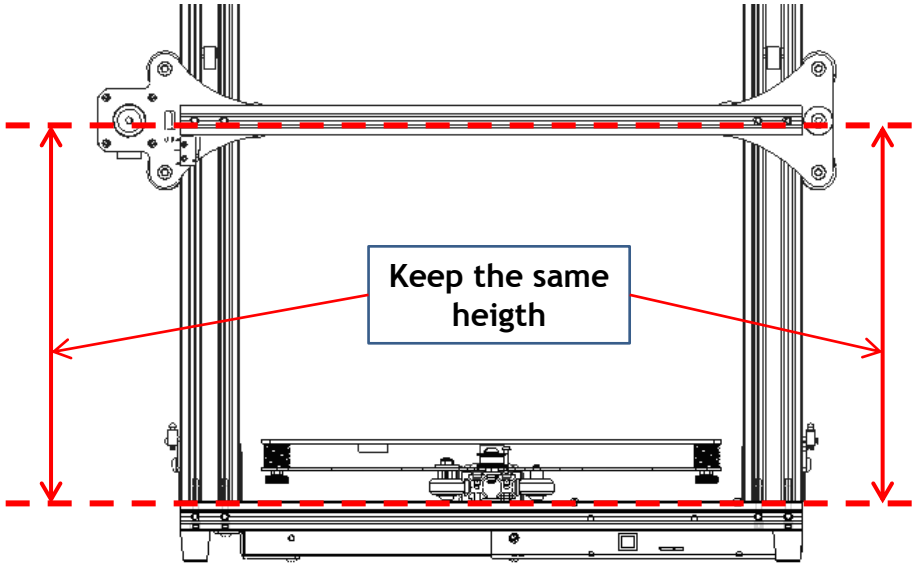

Install print head (hotend assembly)

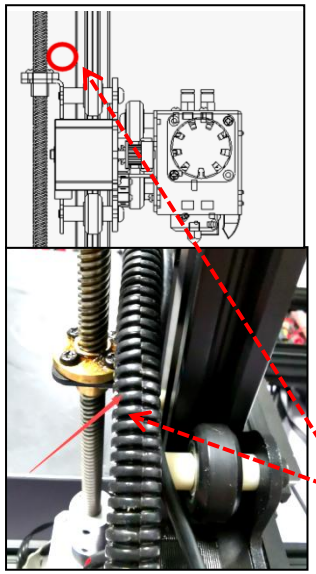

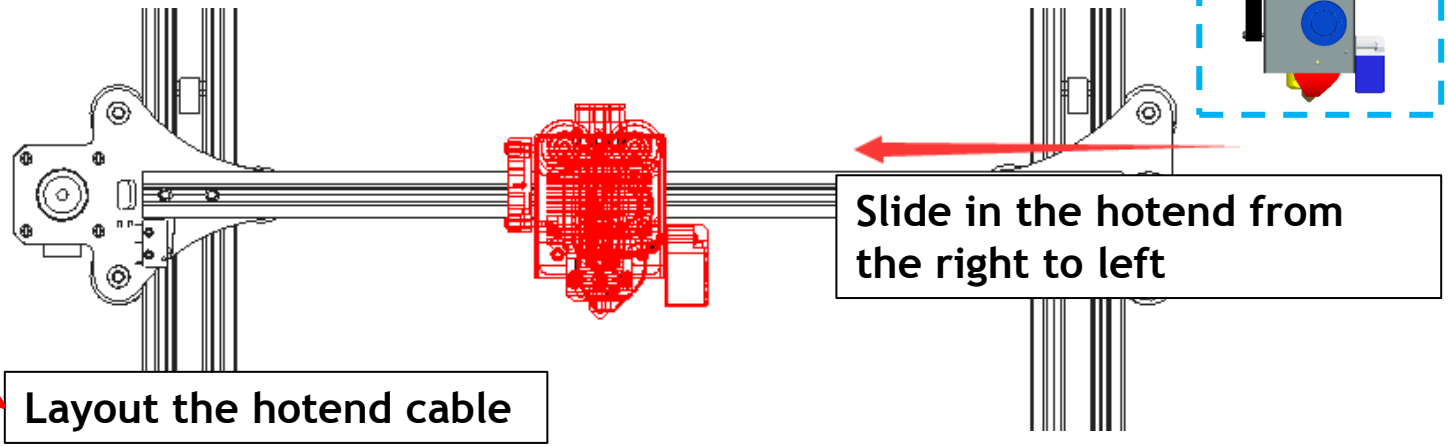

Install X belt

Install the X belt

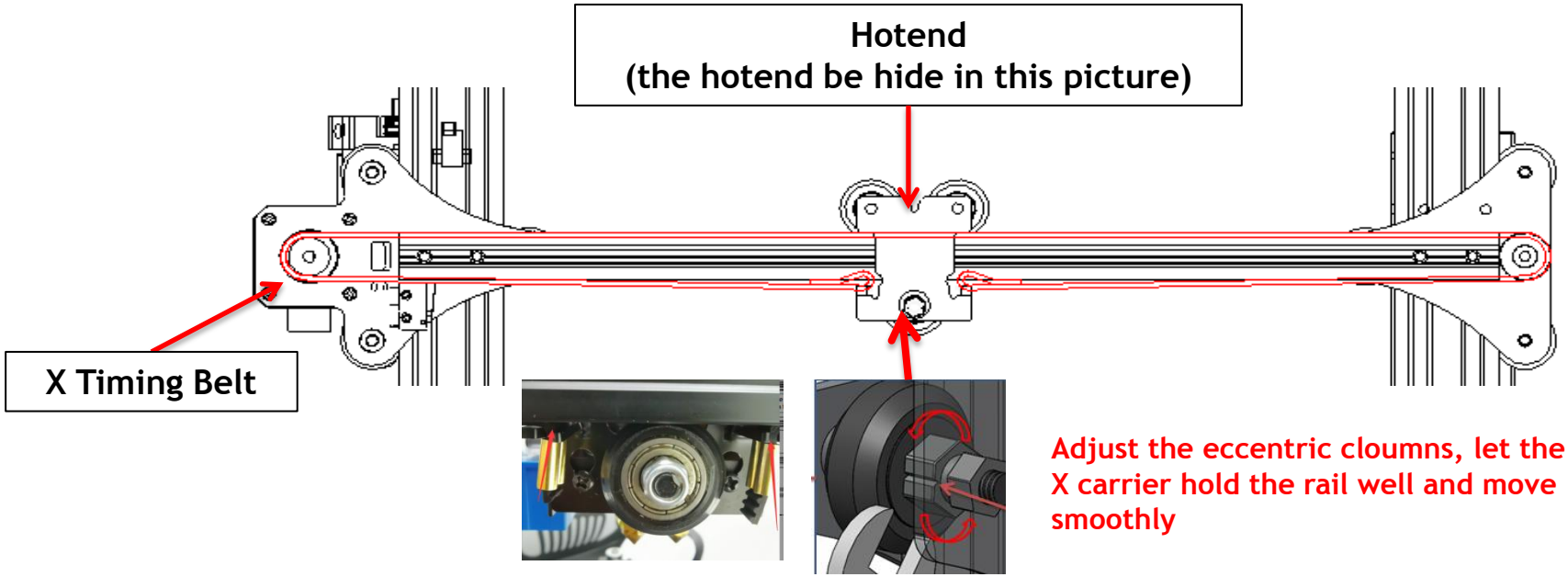

Adjust the eccentric cloumns, let the X carrier hold the rail well and move smoothly

Tigthen the X belt

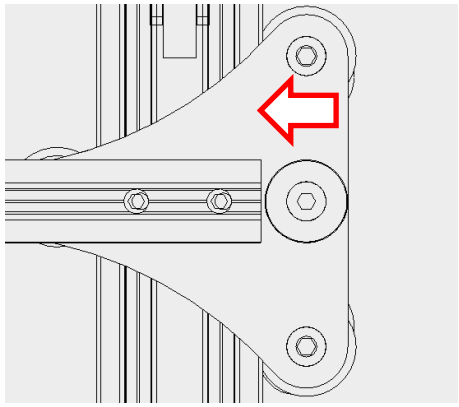

Move X belt idler to the left
before fix the belt

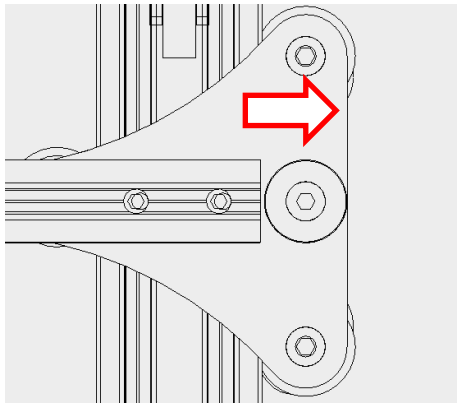

Move X belt idler to the right
after fixed the belt

Install the other parts

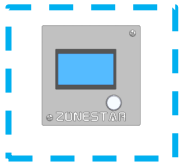

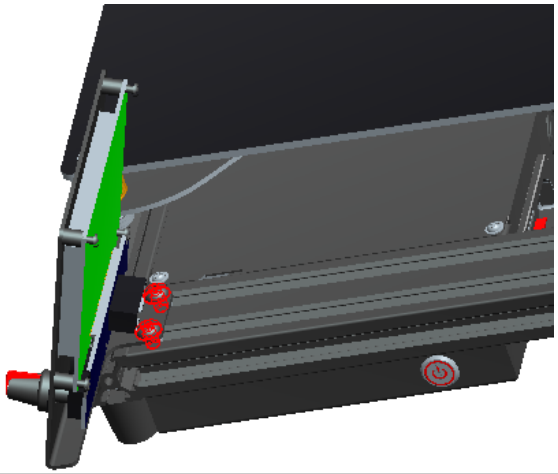

Install the LCD screen on the right/bottom of printer

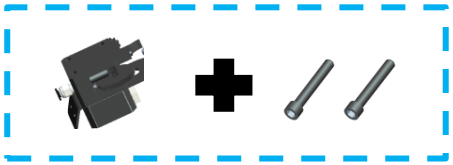

3 or 4

NOTE: Z8-M3 is 3 sets and Z8-M4 is 4 sets

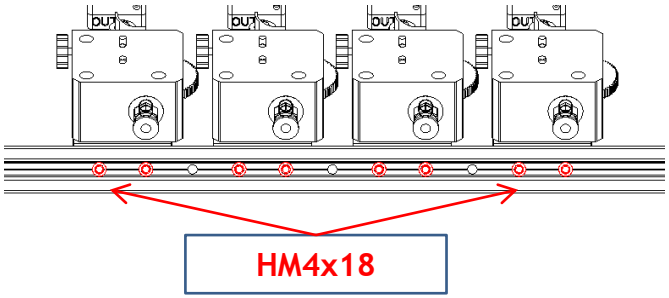

Install Extrusion feeders to the top of the frame

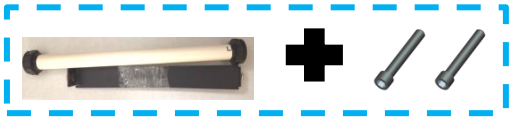

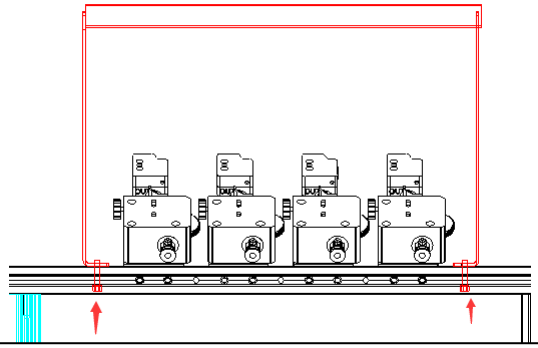

Install the filament roll bracket to the top of the frame

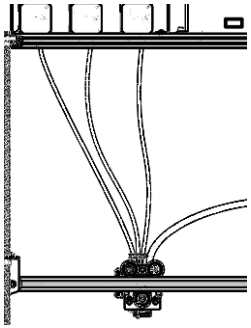

NOTE: Some channels are closed by hotend clean tool when the printer left factory

Connect the extrusion feeder with the print head by filament guide (PTFE tube)

Debug the Z Movement system

Keeping the lead screws parallel to the Z axis profiles as far as possible will help to obtain better printing quality, please debug them refer to the following steps:

Step 1. Loosen all the screws a little that fixed the Z motors and T8 copper nut.

Step 2. Synchronous Rotate the couplings to move up the X axis to 1/2 height of the printer.

Step 3. Keep the lead screws parallel to the Z profiles, then tighten the screws that fixed the Z motor and T8 copper nuts.

Step 4. Install the Z lead screws fix blocks on the top profile.

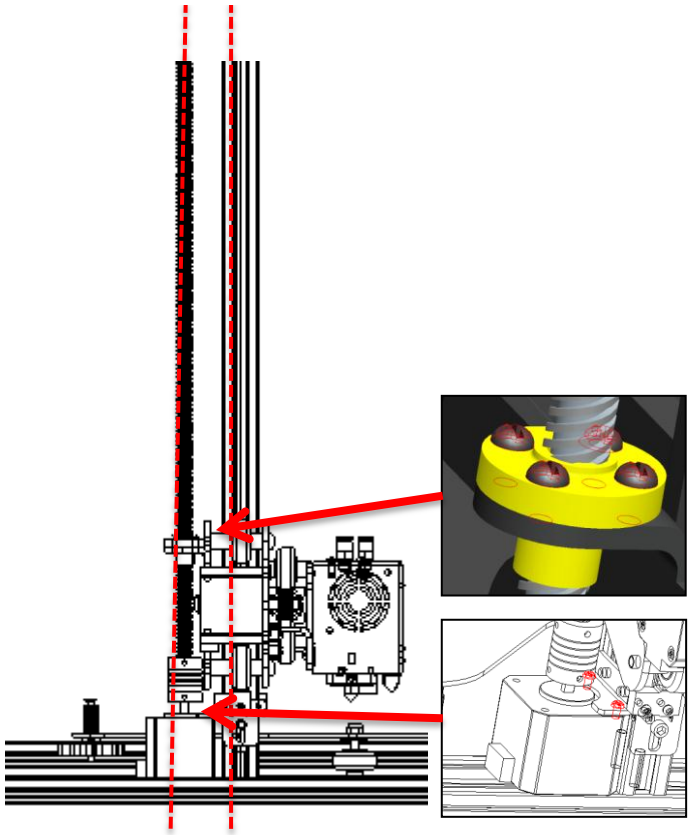

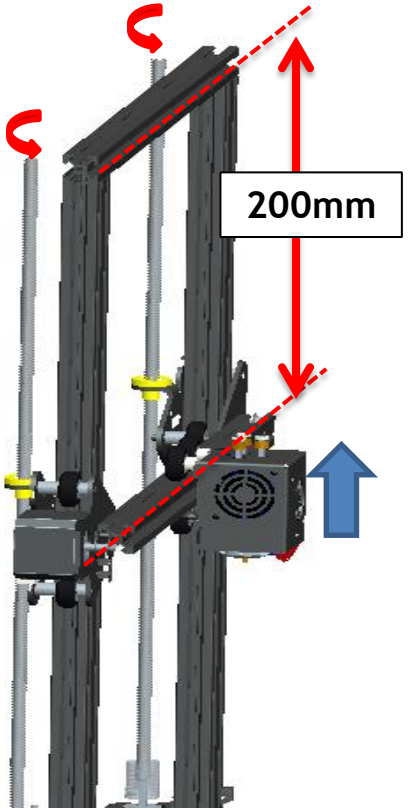

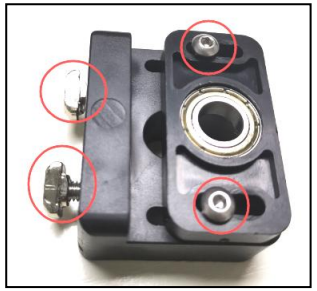

Loosen a little

Put in

Fixed

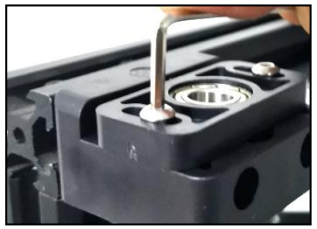

Fixed

Adjust height of Z ENDSTOPs

Step 1: Adjust the 4 hand nuts under the hotbed, let the hotbed is parallel with bottom profile.
Step 2: Manual rotate the couplings on both of the Z axis motors , let the nozzle touched the hotbed.
Step 3: Move up the ENDSTOP, let its RED part touched the pulley of the Z carriers.
Step 4: Tighten the screws to fix the Z ENDSTOPs

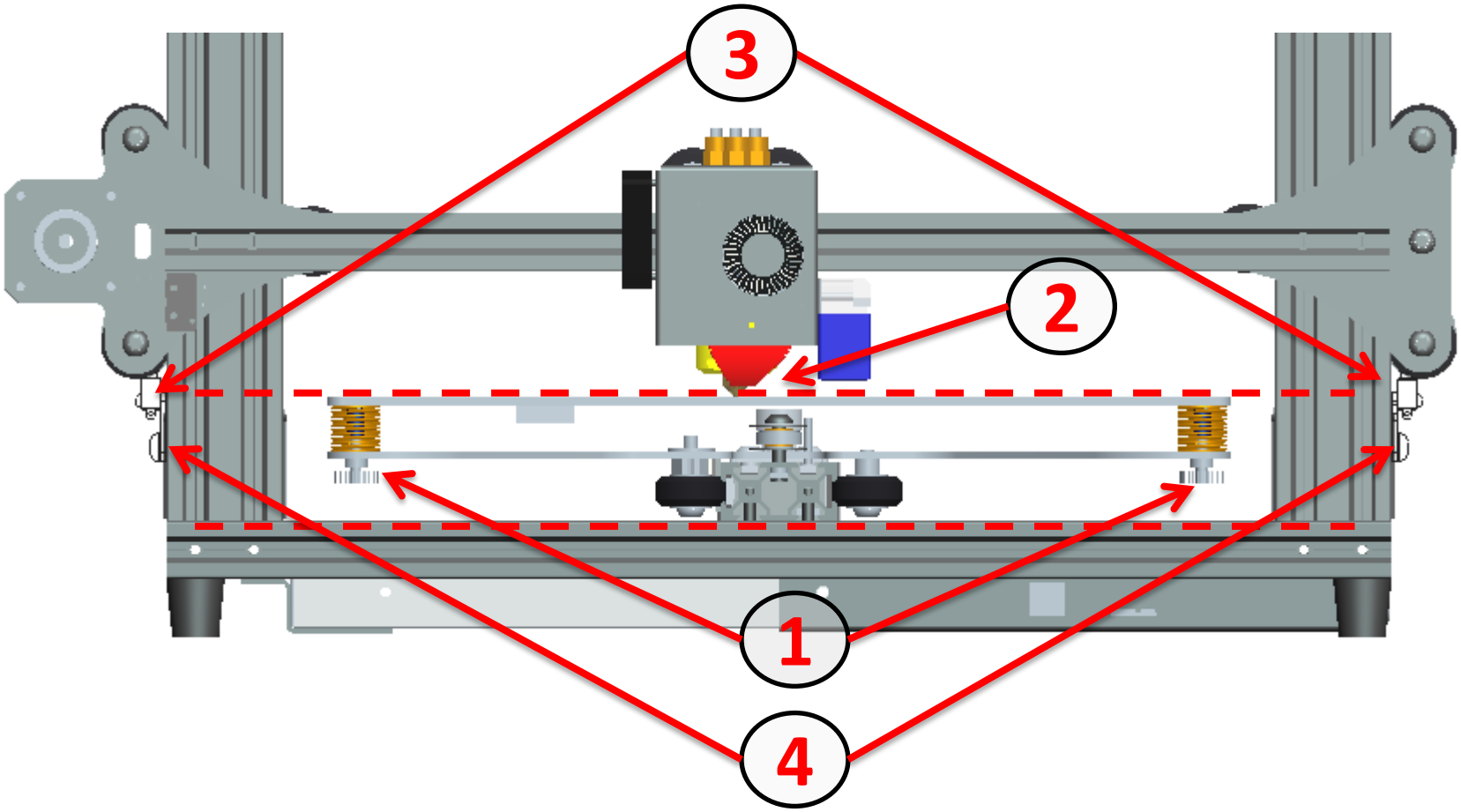

!!ATTENTION!!

Take care when installation, to avoid electrical shock hazards!

Set the 110V/220V swicth (on the side of power supply) to correct position according to your city power voltage!

DC-IN, HOTBED has lager operating current, please make sure these wires contact well with the terminal.

Double check the wiring! WRONG WIRING MAY DAMAGED THE ELECTRONIC DEVICE!

Stop working immediately if the motor has abnormal vibration or noise,, otherwise the driver modules may be damaged!

Make sure the hotend cooling fan is working when the nozzle temperature is over 60 degree, otherwise check the wiring again.

Put the motor wire to the grooves of profile and cover them by plastic profile cover, and using cable tie to wrap the free wires.

About electronics parts

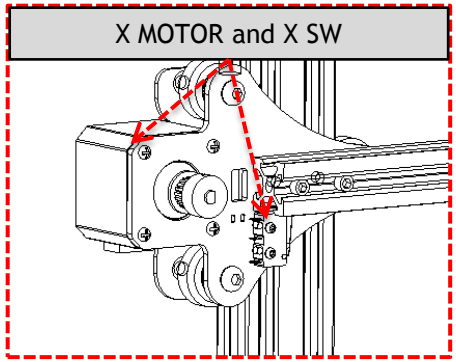

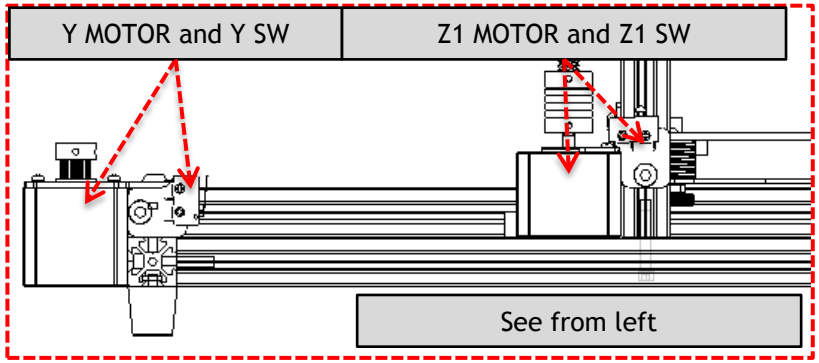

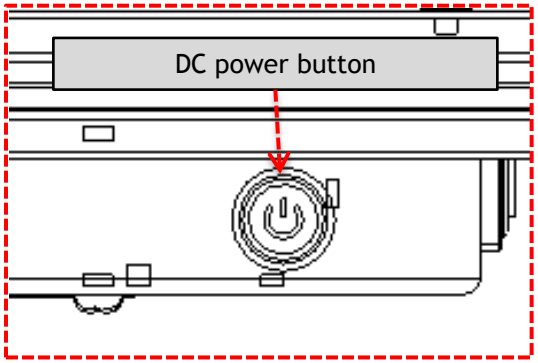

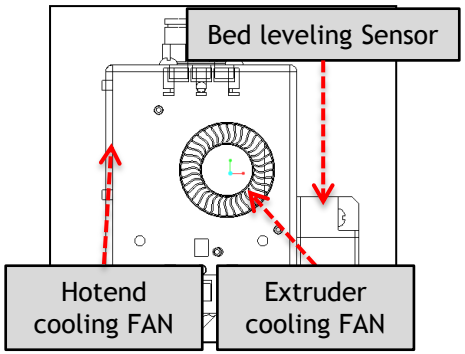

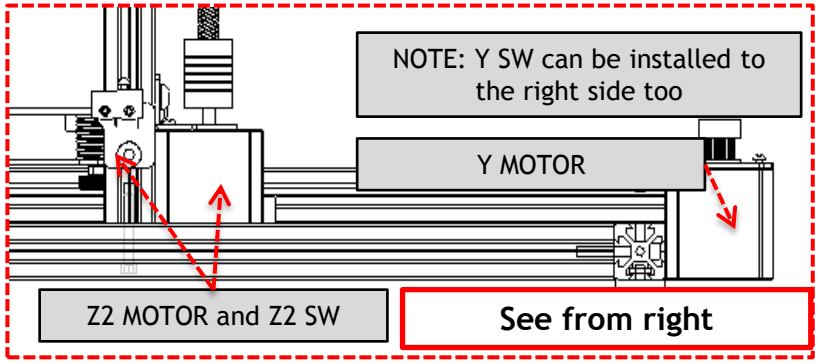

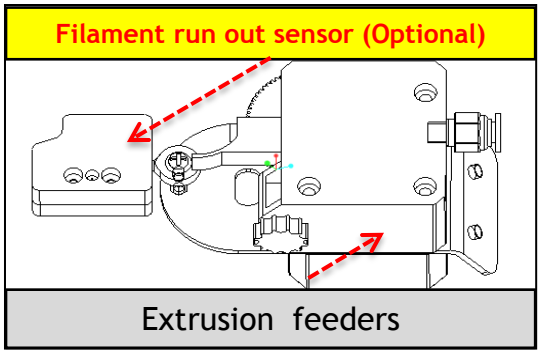

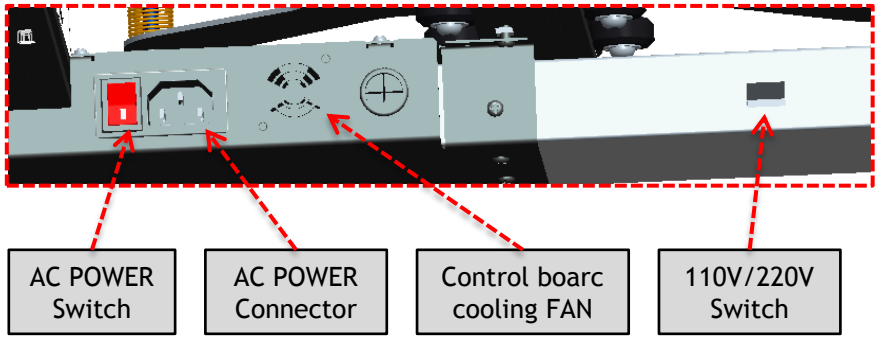

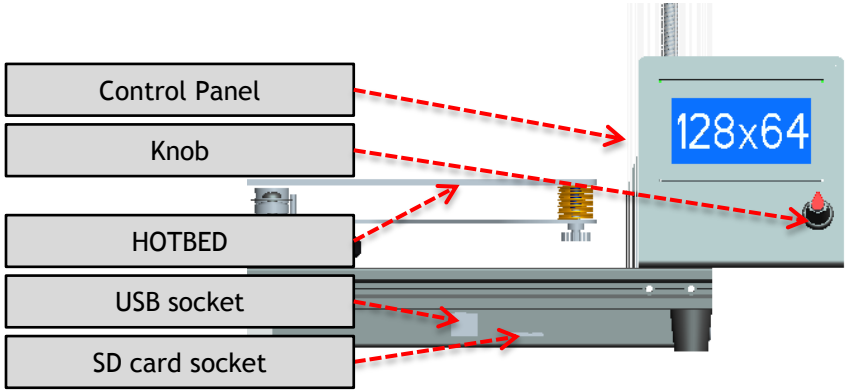

Wiring Block

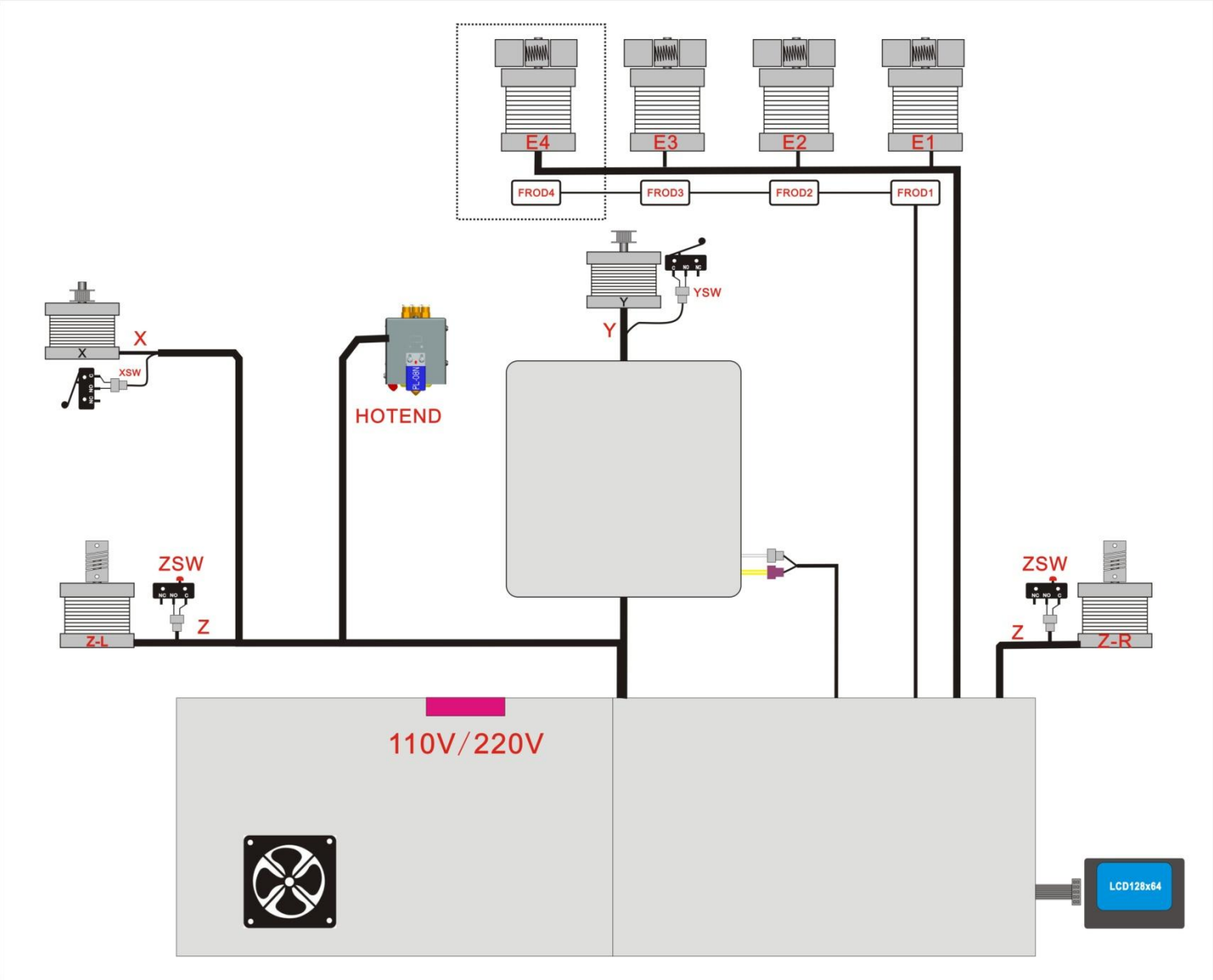

Zonestar

Layout the wires / cables

BOTTOM VIEW

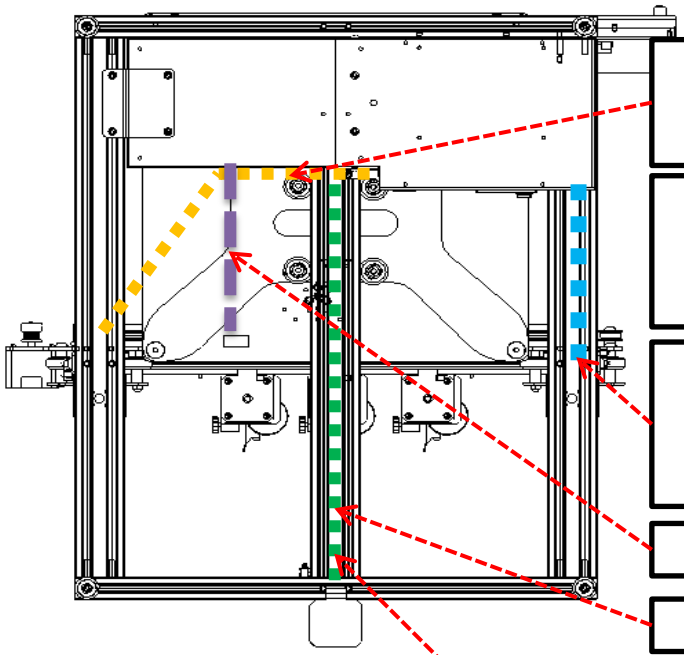

X Motor w/ SW cable
HOTEND Cable
ZL Motor w/ SW cable

E1 Motor
E2 Motor cable
E3 Motor cable
FRODs wire

ZR Motor w/ SW cable
E1 Motor w/ SW cable
E2 Motor cable
EXT3 Motor cable

Hotbed cable

Y Motor w/ SW cable

BACK VIEW

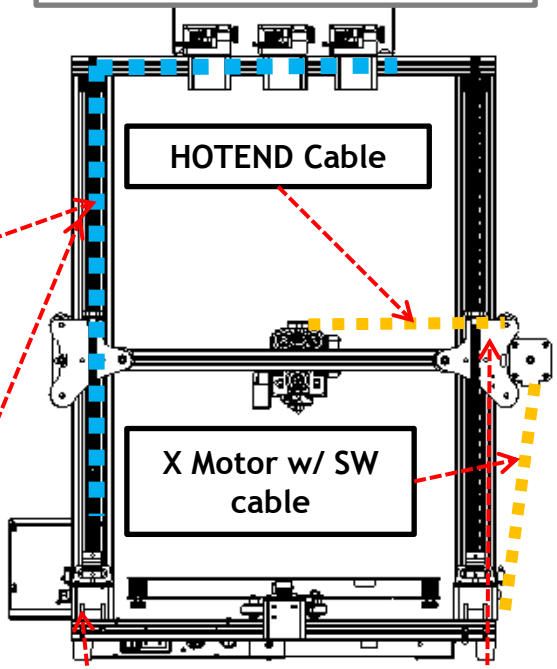

HOTEND Cable

X Motor w/ SW cable

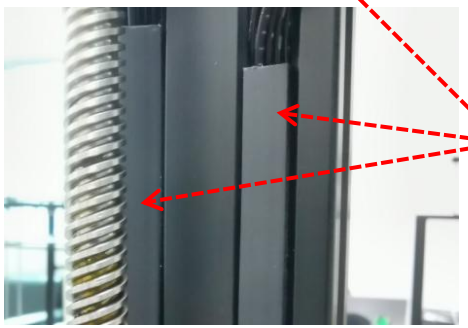

Put the motor wire into the groove of profile, and cover it by the profile cover

Check before power on

It is very important to check the machine before power on. It can eliminate the trouble brought by some hardware to ensure the smooth printing!

Step 1:Please check if the X&Y axis timing pulley are fixed on the shaft of motor, and the couplings are fixed on the shaft of the Z motors.

Step 2:Please check if the lead screws have been fixed on the shaft of coulping.

Step 3: Move the hotend and hotbed to their respective limit switch positions to check whether the contact is good and there is a clear sound. Otherwise, please check the limit switch and reassemble it.

Step 4: Manually move the hotend and hotbed to see if the movement is smooth, otherwise, adjust the eccentric nut until the motor moves smoothly. Refer to the installation procedure.

Step 5: Check whether the X and Y-axis drive belt is firmly installed. If it is too loose, please try to tighten it.

Step 6: Check whether the screw rod is assembled in place and whether the screw is tightened

Step 7: Manually rotate the z-axis screw rod to check whether the z-axis limit switch contacts reliably.

Power ON / Power OFF

!!ATTENTION!!

MAKE SURE THE AC VOLTAGE SELECT SWITH HAS BEED SET TO THE CORRECT POSITION!!!

POWER ON

Plug in AC power cord and turn on the power switch

Push and hold the DC power button

hold the button until the LCD shows Logo

Manual POWER OFF

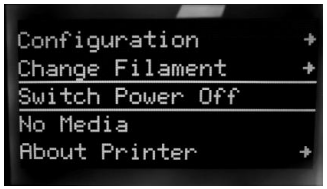

Do “Switch Power Off”

Wait the LCD screen off

Turn OFF AC Power Swith

Auto Power off after printed

If you hope the printer power off automatically when printed is finished, you need to add a command M81 at “end gcode” in slicing software. PS: Only work when printing from SD card!

LCD Menu and Operation

Knob operation: <***Clockwise rotation***>: Next Item / Value +. <***Counterclockwise rotation***>: Previous Item / Value -. <***Push***>: Enter / Execute.

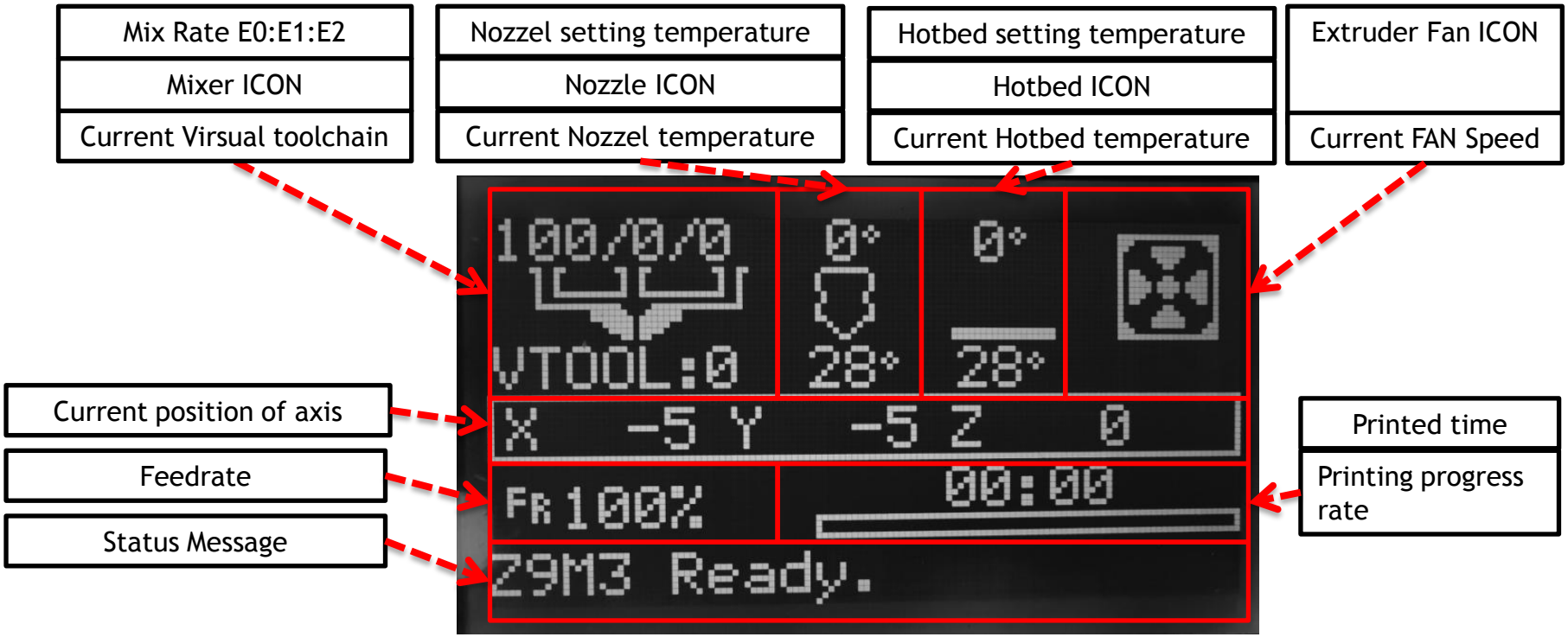

For details on the LCD menu, please refer to **"LCD Menu Description.pdf".**

Virsual Tool Chain: In singel color or general multicolor printer, each extrusion motor corresponds to one nozzle, then one extruder + one nozzle constitutes one tool chain; In mixing color extruder, multiple extrusion motors correspond to one nozzle. Setting different rotation ratios of extrusion motors can form multiple **virtual tool chains**. Z9m3 has up to 16 virtual tool chains. About detail, please refer to "**Mixing Color Hotend User Guide.pdf**" **Feedrate:** When printing from an SD card, adjusting the feedrate can adjust the printing speed, it is based on the speed set by the gcode file when slicing.

Prepare to print - level the hotbed

Congratulations! Now you have finished installation and check, you can start to print your first works. Before printing, you need to level the hotbed first.

1. **Clean nozzle:** make sure there aren't any filament at the end of nozzle, if not, remove it by a diagonal pliers.
2. Choose “Motion>> Auto Home”>>, wait the hotend go to the orig position.
3. Watch the nozzle and make sure the nozzle is higher than the bed, otherwise tighten the hand nuts under the bed to pull down the hotbed or loosen these nuts to move up the bed.
4. Choose “Motion>> Level Corners”>>, the nozzle will go to the corners, adjust the hand nuts under the hotbed, let the nozzle almost touch the hotbed. In order to get a properly distance, you can put a A4 paper on the hotbed, and when the distanse between the nozzle and hotbed can only insert a paper, it will be perfect.
5. Choose “next corner”, and adjust again. Repeat this step again and again, until all of the four corner at the same height.

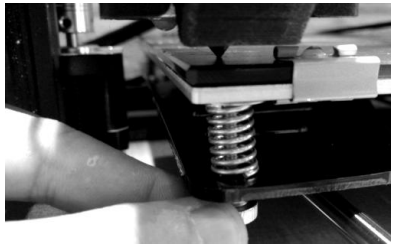

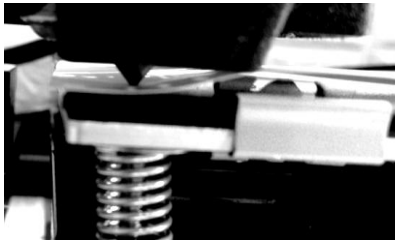

Home all axis → start “level corners” wizard → Adjust bed height → put a paper on the bed to measure the height

Prepare to print - Load Filament

NOTE: We strongly recommend that you start with single color. When the product leaves the factory, we have closed some channels with *hotend cleaning tools*. You can use that unclosed channel to print your first work.

1. Preheat nozzle: **Temperature>> Nozzle**, set it to about 180 degree (for PLA) or 220 degree(for ABS and PETG filament), then nozzle will be heated. **Waiting nozzle temperature reached to setting.**

2. Press the handle on the extrude feeder and insert filament, until the filament enter to the hotend.

3. Choose "**Motion>> Move axis>>Extruder>>Move 1mm>>extruder: ****mm**", then Clockwise rotate the knob slowly, until you can see the filament is flowed from the nozzle.

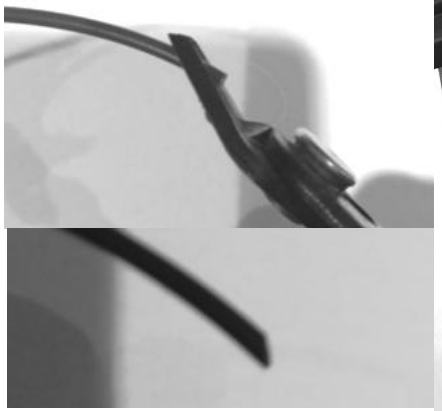

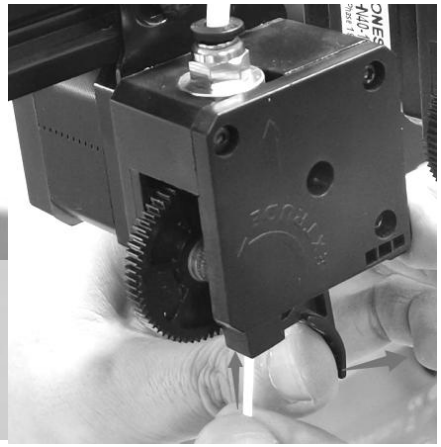

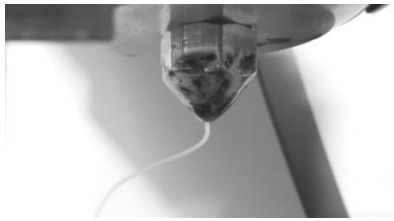

Preheating the nozzle → Use a diagonal pliers to cut off the head of filament → Press the handle and insert filament into the extruder engine → Watch the nozzzle, until the filament is flowing out

Print a test 3D object (Print from SD card)

1. Insert the SD card to the SD card socket on the control box.
2. Choose “Print from Media”>> Choose “Test_gcode\xyz_cube.gcode”, push the knob to start printing.
3. Wait the printer to finish heating and start to print, watch the distance from nozzle to bed, **double click** the knob of LCD menu, it will call out a “Baby Z menu” , rotate the knob to fine tune the distance from nozzle to the bed, let the filament can stick on the hotbed well.

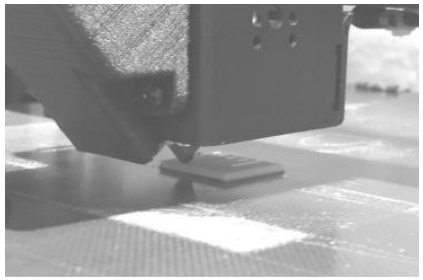

Insert SD card and start to print from SD card → Wait the hotbed and nozzle heating → Adjust distance from nozzle to the bed → Wait for printing finish!

Too Far

Too close

Good

Slicing

About slicing

Slicing a 3D drawing translates the 3D drawing into a language that a 3D printer can understand and print. The slicing software is a computer software used in the majority of 3D printing processes for the conversion of a 3D object model to specific instructions for the printer. In particular, the conversion from a model in ***STL(Obj, Amf)*** format to printer commands in **g-code** format. This machine can use a variety of slicing software to complete slicing. We will now introduce the most commonly used slicing software: **Cura**.

NOTE: 1. Slicing software is not a part of this machine. **2.** You can download Cura for free from the internet.

Install slicing software and step up the printer

In order to run the slicing software, you need a PC or laptabe, installed windows/linux/Macos.

Step 1: Download and install ***Cura*** to your PC, please search "**ultimaker cura**" from google.

Step 2: Copy "**cura resources.zip**" from the SD card and unzip it to your PC.

Step 3: Copy "resources" file to the same directory in cura which you installed.

Step 4: Run ***cura*** software, and follow the below steps to choose the printer.

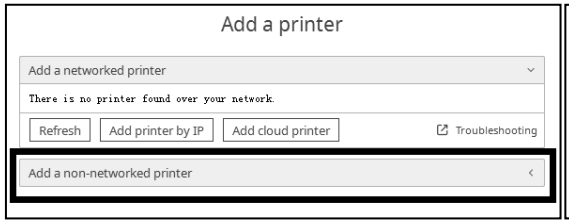

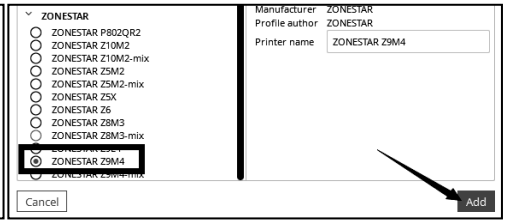

Download Cura

Download Slicing Guide

Slicing process

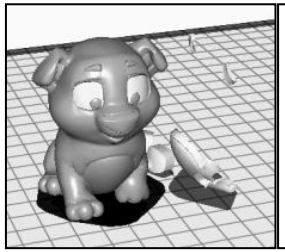

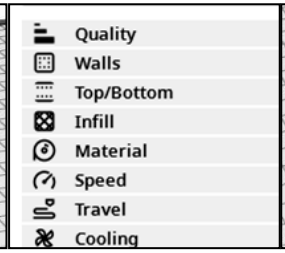

Load stl files → Setup settings → Slicing and preview → Store to SD card

NOTE: For description of slicing, please refer to the documents in the directory of "slicing guide".

Advance features

NOTE: Do not turn on these functions until you clearly understand how to use them and precautions.

◆ Bed auto leveling feature:

This printer is equipped with a ***Bed leveling sensor (PL-08N)***, with this sensor, you can correct the unevenness of the hot bed. . For the detail please refer to the guide in ***"Bed Auto Leveling Feature"***.

Switch on: MENU>>Control>> Configre>> Auto Leveling

◆ Auto retract feature:

The strings issue of the mixed color hot end is often more serious than that of the single color hotend. Therefore, an automatic retraction feature is set in the firmware. Using automatic retraction can improve this problem. For the detail please refer to ***How to set auto retract function.pdf***.

◆ Filament run out detection feature:

This printer is equipped with 4 *filament run out sensors*. With these sensors, the printer can pause the printing while one of the filament spool used up, and when you load a new roll filament, you can continue to print. For the detail please refer to ***How to set filament runout function.pdf***.

Switch on: MENU>>Control>>Configre>>Runout Sensor

◆ Power loss recovery feature:

While printing from SD card and power is lost, after power on again, the printer will resume to print from the last layer which printed before power lost. For the detail please refer to ***Power loss recovery feature user guide.pdf***.

Switch on: MENU>>Control>> Configre>>PowerLoss Recovery

◆ Auto mixing color feature:

Default Z8P is equipped with a 3(4)-IN-1-OUT mixing color hotend, it has a gradient/random mixing engine to convert singel color gcode file to a gradient color object. For the detail please refer to ***How to set gradient color printing.pdf*** ***and*** ***How to set random color printing.pdf***.

Wiring Diagram

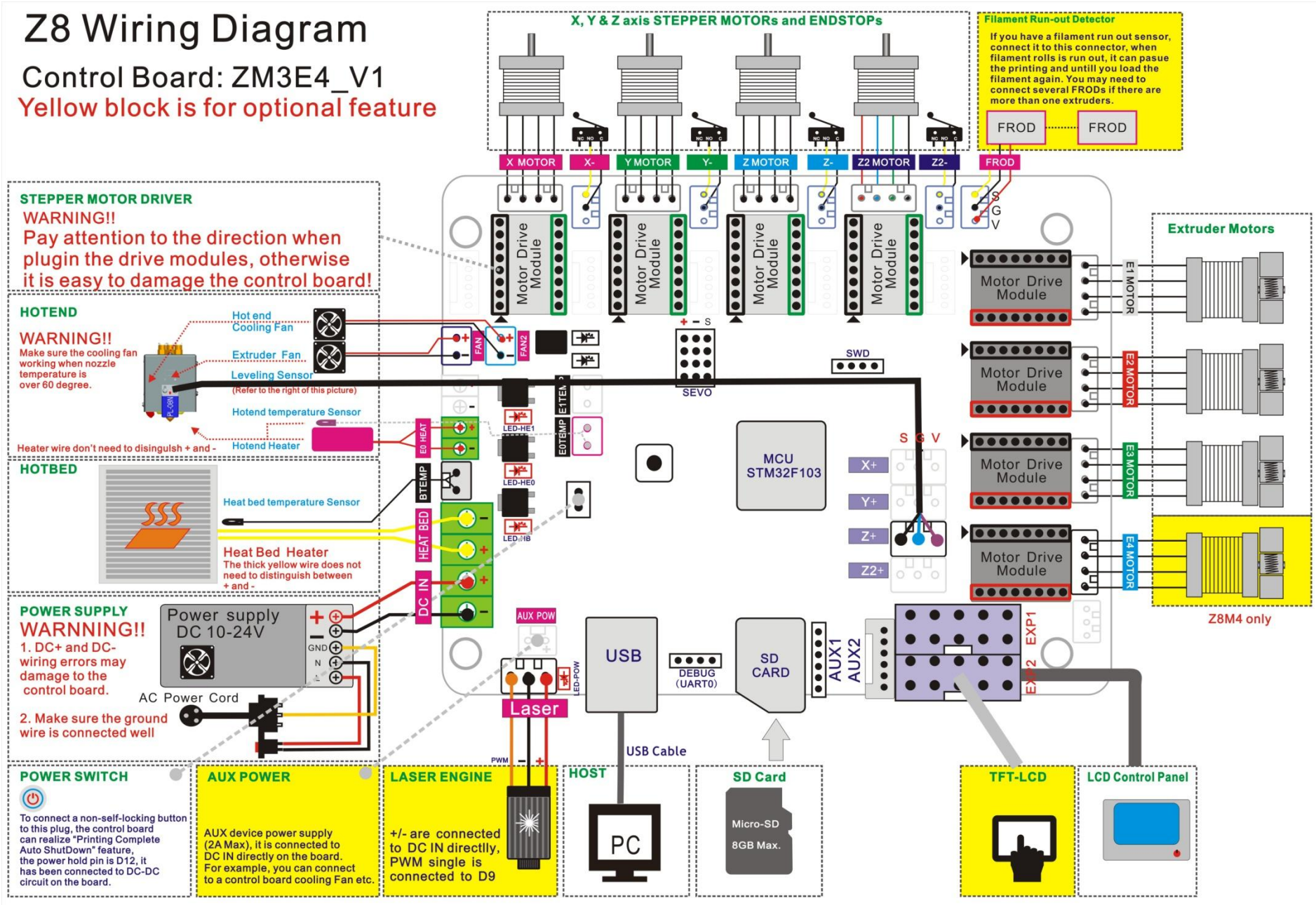

Verify wiring

After finish to assemble and wiring, please following the steps below to verify.

Step 1: Before turning on the power, confirm again:

- ✓ Check if it has been set correctly of the 110V/220V power voltage select switch.
- ✓ Check if the components are connected correctly.
- ✓ Check if the cable of LCD is connected well.

Step 2: Check temperature sensor:

Plug in the AC power cord and turn on AC power, watch the LCD screen, temperature should be almost the same with ambient temperature.

Step 3: Check X, Y and Z axis Motors and ENDSTOPs:

DO: Motion>>Move axis>>Move X/Y/Z>> Move 10mm. Enter and rotate knob to move the X/Y/Z axis.

CHECK: Check if the print head can move left/right (X axis), front/back (Y axis), or the hotbed can move up/down (Z axis).

NOTE: If the X and Y can't move correctly, e.g. when moving X or Y, the print head move in 45 degrees, it means that x motor or Y motor does not working, please check the wiring.

CHECK: Press and hold the **X/Y** limit switch, and try to reduce the value of ***Move X/Y***, the print head should stop moving, otherwise check the connection of the **X/Y** limit switch.

CHECK: Press and hold the **Z** limit switch, and try to reduce the value of ***Move Z***, the hotbed should stop moving, otherwise check the connection of the Z- limit switch.

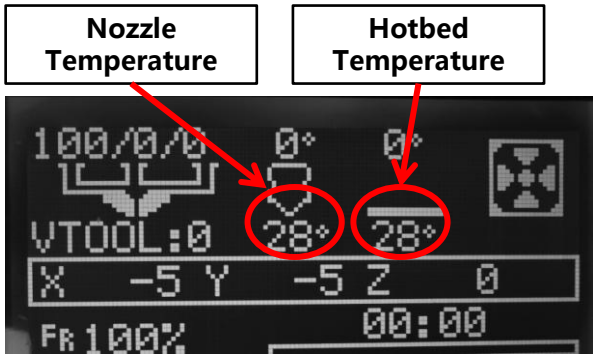

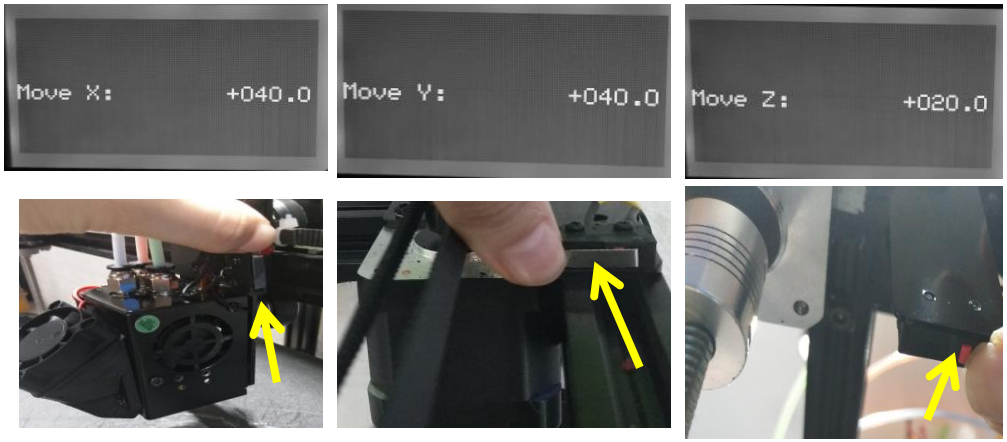

Verify wiring

Step 4: Check heaters and Fans:

1. ***Temperature>>Nozzle: 180***, set the nozzle temperature to 180 degrees, and then return to info menu, the nozzle temperature will rise, usually it is one degree per seconds or so.
2. ***Temperature>>Bed: 60***, set the heat bed temperature to 60 degrees, and then return to info menu, the hotbed temperature will rise, usually it is one degree per 2 seconds or so.
3. **Check HOTEND cooling fan.** When the nozzle temperature is over 60 degrees, the cooling fan on the side of print head should work.
4. **Check Extruder fan, *Temperature>>Fan Speed: 100%*,** the extruder fan should work.

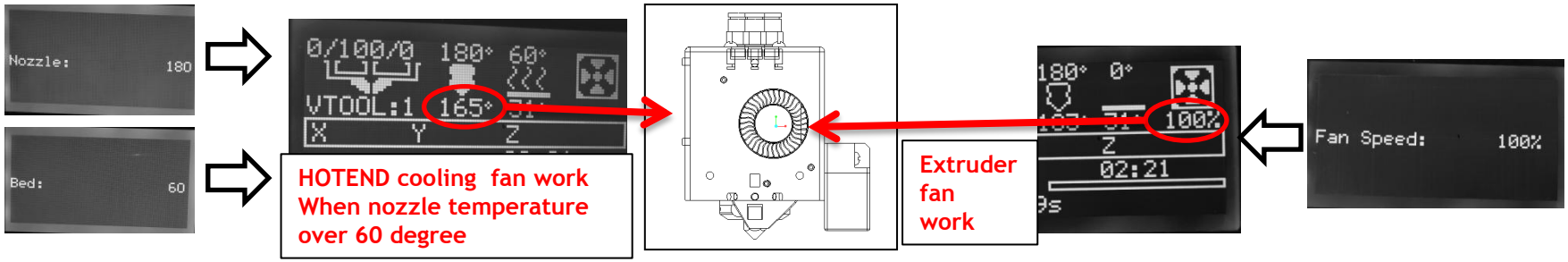

Step 5: Check extrusion feeders:

1. ***Temperature>>Nozzle: 180***, set the nozzle temperature to 180 degrees, and then return to info menu, waiting for the temperature reached to the setting.
2. ***Set the mixing ratio of all extruders to the same (33:33:34 for M3 and 25:25:25:25 for M4):***

   for M3: Mixer>>Set Mix>>Active V-tool: 0>> set to Active V-tool: 3

   for M4: Mixer>>Set Mix>>Active V-tool: 0>> set to Active V-tool: 4
3. ***Move Axis>>Extruder>>Move 10mm>>Extruder: +20mm***, watch the gear of the extrusion feeder, and check if all of the extrusion feeders will work.

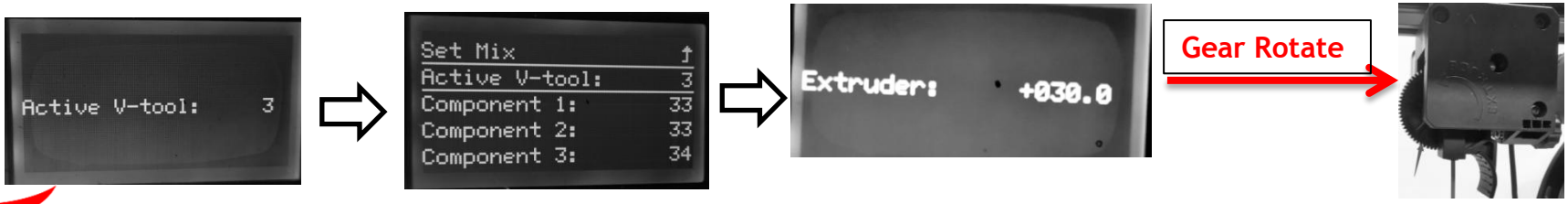

Quickly Trouble-shooting

LCD does not display after Power on	1. The backlight of LCD does not light up. Possible reasons: The AC power cord is not plugged in; DC+ and - are reversed; the power socket are disconnected with power supply. 2. The backlight of LCD light but has not characters. Possible reasons: LCD cable is reversed; firmware error or lost;
Error temperature	**Hotend temperature sensor doesn't connect well** **Hotbed temperature sensor doesn't connect well** 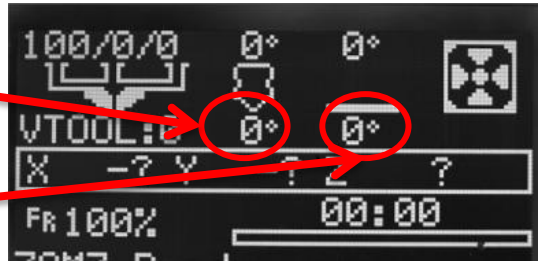
Motor or extrusion feeder does not work properly	1. The power supply does not work (Note:USB can also supply +5V power and let the LCD display, but can not supply power to the motors and heater). 2. The motor cable is disconnected. 3. The motor drive module didn't connect well with the socket of control board. 4. Heating the nozzle to over 150 degrees before extruding.
Error Motor Direction	1. The motor is not connected to the correct connecotor of the control board, such as exchanged the X and Y sockets. 2. The wire sequence of the motor cable is incorrect. 3. The firmware version is incorrect.
Issue of limit switch(ENDSTOP)	1. The wire of the limit switch is disconnected to the control board. 2. The limit switch is connected to the wrong connector, for example, exchanged the X and Y limit switches. 3. The wire is disconnected witht the limit swich. 4. Check the singnal of the limit swith, it should be connected to pin "**S**" and "**GND**" of the connnector on control board.
Issue of heatbed and hotend	1. **The printer reboot automatically when heating the heat bed or nozzle.** Check if the AC power supply voltage selection switch is set correctly and the DC power cable is connected well. 2. **Hotend cannot be reached to the setting temperature.** Check if the thermistor is missing from the heated block. Check if the printhead heater cable is connected well. 3. **Hotbed cannot be reached to the set temperature**. A)Check if the wiring is contact well. B)Check If the ambient temperature is less than 5 degree.

Upgrade your printer

You can print something to upgrade your printer, we have made some printed part and store the stl file to the SD card, you can feel free to slicing it and print it out, and then install them to your kit to make the printer better.

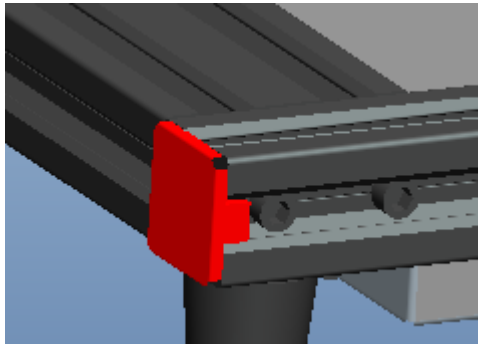

cap_af_20v.stl

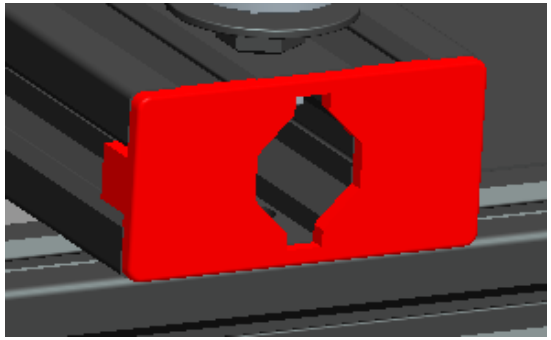

cap_af_40v.stl

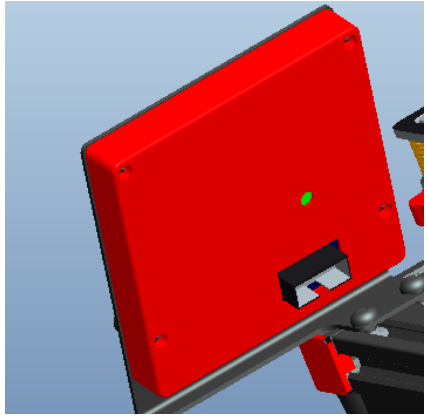

lcd12864_case_v2.stl